KOP_9.0

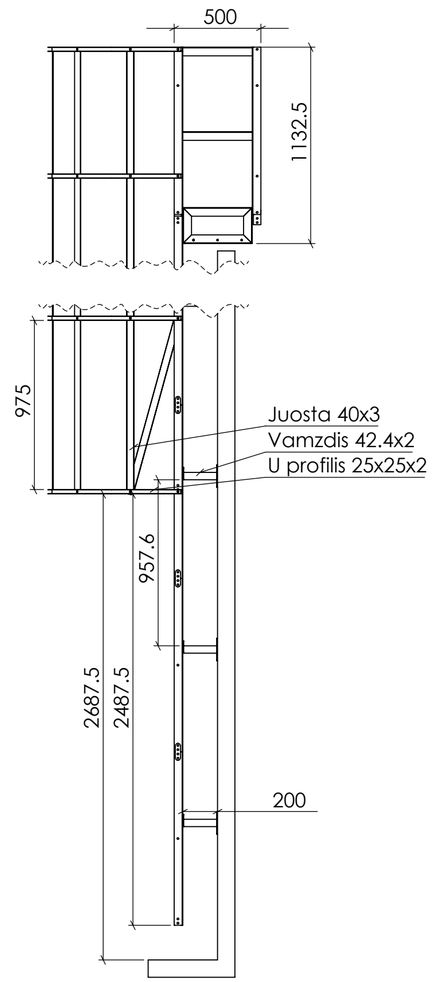

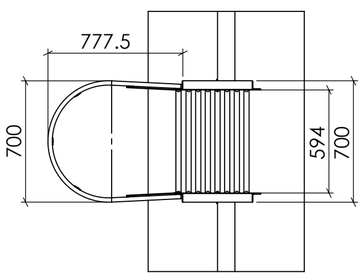

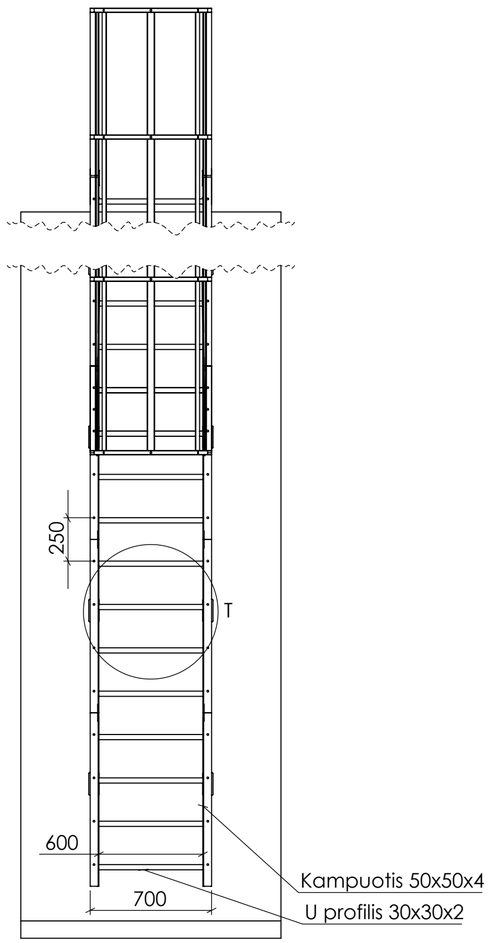

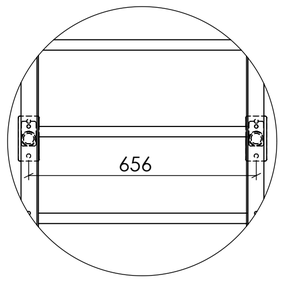
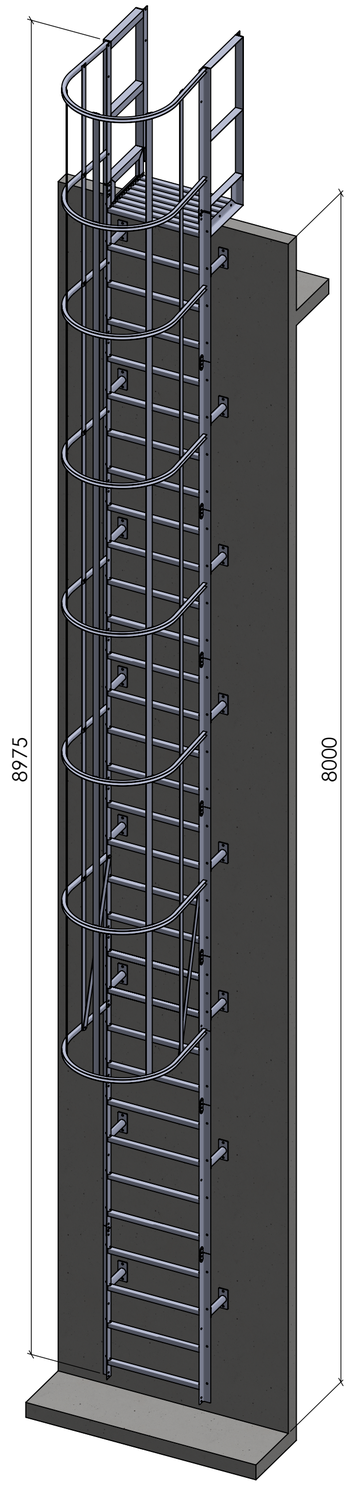
DETAIL T
SCALE 2 : 25